THIS DRAWING IS UNPUBLISHED. RELEASED FOR PUBLICATION 2014
© COPYRIGHT 2014 Tyco Electronics AMP GmbH ALL RIGHTS RESERVED.

	TE ORDER NO. / STRIP FORM Bandware	REV.	DESIGN Ausfuehrung	MATERIAL Werkstoff	SURFACE Oberflaeche	WIRE RANGE Drahtgroessen Bereich [mm²]	INSULATION Isolations Ø [mm]	STRIP FORM / WIRE CRIMP Drahtcrimp / Bandware / CRIMP DIMENSION (mm) Crimpabmessungen (mm)	INSUL.-CRIMP Iso.-Crimp	A	B	C	D	E	CRIMP DATA AND CRIMP TOOL Crimpdaten u. Crimpwerkzeuge
UNSEALED/ ungedichtet; A17	2367105-6	A	5	CuSn4	△1	0.35-0.5 FLR	1.1-1.4	E = 2.4 G = 2.3 D_{Dr} = 1.0	H = 2.9 K = 2.9 D = 1.4	2.5	3.8	5.7	18.8	0.2	SEE APPLICATION - SPECIFICATION siehe Verarbeitungsspezifikation 114-18050
A17	2367105-3	A	5		PRETINNED vorverzinnt min. 1µm										
A17	2367105-1	A	5	CuFe2											
	965901-1 △12	A	1	CuSn4	PRETINNED vorverzinnt min.0.8µm	0.5-1.0 FLR	1.4-2.3	E = 2.6 G = 2.8 D_{Dr} = 1.1	H = 3.6 K = 3.9 D = 1.8	3	4	5.5	18.8	0.4	
	965899-1 △12	A	1	CuSn4	PRETINNED vorverzinnt min.0.8µm	>1.0-2.5 FLR	2.1-3.1	E = 3.6 G = 3.8 D_{Dr} = 1.8	H = 4.7 K = 4.9 D = 2.6	3.3	4.3	5.8	18.8	0.4	
A17	928876-1 △13	A	1	CuSn4	PLAIN BLANK	0.5-1.0 FLK	2.0-2.7	E = 2.6 G = 2.8 D_{Dr} = 1.1	H = 3.9 K = 4.1 D = 2.4	3	4	5.5	18.8	0.4	
	927775-7	M	1	CuNi12ZN24	PRETINNED vorverzinnt min.0.8µm	0.5-1.0 FLK	2.0-2.7	E = 2.6 G = 2.8 D_{Dr} = 1.1	H = 3.9 K = 4.1 D = 2.4	3	4	5.5	18.8	0.4	
	927775-6	M		CuSn4	△1										
	927775-3	M		CuSn4	PRETINNED vorverzinnt min. 0.8µm										
	927775-1	M		CuFe2	PRETINNED vorverzinnt min. 0.8µm										
	928810-1 △9	A	1	CuFe2	PRETINNED vorverzinnt min. 1µm	0.5-1.0 FLR	1.4-2.3	E = 2.6 G = 2.8 D_{Dr} = 1.1	H = 3.6 K = 3.9 D = 1.8	3.0	4.0	5.5	18.8	0.4	
	963884-1 △9	A	1	CuSn4	PRETINNED vorverzinnt min. 1µm	>1.0-2.5 FLR	2.1-3.1	E = 3.6 G = 3.8 D_{Dr} = 1.8	H = 4.7 K = 4.9 D = 2.6	3.3	4.3	5.8	18.8	0.4	
	927773-3	N	1	CuSn4	PRETINNED vorverzinnt min. 1µm	>1.0-2.5 FLK	2.7-4.1	E = 3.6 G = 3.8 D_{Dr} = 1.8	H = 5.5 K = 5.8 D = 3.6	3.3	4.3	5.8	18.8	0.4	
	927773-1	N		CuFe2											
	2-927768-1	R	1	CuSn4	△2	>1.0-2.5 FLR	2.1-3.1	E = 3.6 G = 3.8 D_{Dr} = 1.8	H = 4.7 K = 4.9 D = 2.6	3.3	4.3	5.8	18.8	0.4	
	1-927768-1	R		CuFe2											
	927768-9	P		CuSn4	△3 △4										
A17	927768-8	P		CuFe2	PRETINNED vorverzinnt min. 1µm Spring selective Au Plated										
	927768-6	P		CuSn4	△1										
	927768-3	P			PRETINNED vorverzinnt min. 1µm										
	927768-1	P		CuFe2											
	1719810-1 △10	A	1												
	2-927771-2	N	1	CuSn4	△3 △6	0.5-1.0 FLR	1.4-2.3	E = 2.6 G = 2.8 D_{Dr} = 1.1	H = 3.6 K = 3.9 D = 1.8	3	4	5.5	18.8	0.4	
	2-927771-1	N			△2										
	1-927771-1	N		CuFe2											
	927771-9	M		CuSn4	△3 △4										
	927771-8	N			△3 △5										
	927771-6	M			△1										
	927771-3	M			PRETINNED vorverzinnt min. 1µm										
	927771-1	M		CuFe2											
	2-927774-1	C	2	CuSn4	△2	0.2-0.5 FLR	1.0-1.6	E = 2.1 G = 2.1 D_{Dr} = 0.8	H = 2.7 K = 2.8 D = 1.4	2.5	3.5	5.6	18.8	0.4	
	1-927774-1	C		CuFe2											
	927774-6	B		CuSn4	△1										
	927774-3	B			PRETINNED vorverzinnt min. 1µm										
	927774-1	B		CuFe2											
	963708-1	B	2	CuFe2	PRETINNED vorverzinnt min. 1µm	0.08-0.2 Sonderleitung	1.5-1.8	E = 1.7 G = 1.7 D_{Dr} = 0.6	H = 3.1 K = 3.2 D = 1.6	2.5	3.7	5.9	18.8	0.4	
	969137-1 △12	A	3	CuSn4	PRETINNED vorverzinnt min.0.8µm	0.2-0.5 FLR	1.2-2.3	E = 2.1 G = 2.1 D_{Dr} = 0.8	H = 3.5 K = 3.6 D = 2	2.5	3.5	5	18.8	0.4	
	1-927778-1	D	3	CuFe2	△2	0.2-0.5 FLK	1.2-2.3	E = 2.1 G = 2.1 D_{Dr} = 0.8	H = 3.5 K = 3.6 D = 2.0	2.5	3.5	5	18.8	0.4	
	927778-3	C		CuSn4	PRETINNED vorverzinnt min.0.8µm										
	927778-1	C		CuFe2											
	2112132-1 △13	A	4	CuSn4	PLAIN BLANK	0.2-0.5 FLR	1.15-1.6	E = 2.4 G = 2.3 D_{Dr} = 1	H = 2.9 K = 2.9 D = 1.4	2.5	3.5	5.6	18.8	0.2	
SINGLE WIRE SEAL/ Einzeldichtungssystem △11	2-927766-1	E	5	CuSn4	△2	>1.0-2.5 FLK	2.7-3.0	E = 3.6 G = 3.8 D_{Dr} = 1.8	H = 5.4 K = 4.6 D = 3.2	3.5	5.9	7.5	18.8	0.4	
	1-927766-1	E		CuFe2											
	927766-3	D		CuSn4	PRETINNED vorverzinnt min. 1µm										
	927766-1	D		CuFe2											
	2-929937-1	E	5	CuSn4	△2	>1.0-2.5 FLR	2.7-3.0	E = 3.6 G = 3.8 D_{Dr} = 1.8	H = 5.4 K = 4.6 D = 3.2	3.5	5.9	7.5	21	0.4	
	1-929937-1	E		CuFe2											
	929937-6	E		CuSn4	△1										
	929937-3	E			PRETINNED vorverzinnt min. 1µm										
	929937-1	E		CuFe2											
	2-929939-1	E	5	CuSn4	△2	0.5-1.0 FLR	1.4-2.1	E = 2.6 G = 2.8 D_{Dr} = 1.1	H = 5.4 K = 4.6 D = 3.2	3	5.4	7	21	0.6	
	1-929939-1	E		CuFe2											
	929939-6	E		CuSn4	△1										
	929939-3	E			PRETINNED vorverzinnt min. 1µm										
	929939-1	E		CuFe2											
	2-927770-1	G	5	CuSn4	△2	0.5-1.0 FLR	1.4-2.1	E = 2.6 G = 2.8 D_{Dr} = 1.1	H = 5.4 K = 4.6 D = 3.2	3	5.4	7	18.8	0.6	
	1-927770-1	G		CuFe2											
	927770-6	F		CuSn4	△1										
	927770-3	F			PRETINNED vorverzinnt min. 1µm										
	927770-1	F		CuFe2											
	2-929941-1	E	6	CuSn4	△2	0.2-0.5 FLR	1.15-1.6	E = 2.1 G = 2.1 D_{Dr} = 0.8	H = 5.4 K = 4.6 D = 3.2	2.5	4.9	6.5	21	0.9	
	1-929941-1	E		CuFe2											
	929941-6	D		CuSn4	△1										
	929941-3	D			PRETINNED vorverzinnt min. 1µm										
	929941-1	D		CuFe2											
	1-927772-1	D	6	CuFe2	△2	0.2-0.5 FLR	1.15-1.6	E = 2.1 G = 2.1 D_{Dr} = 0.8	H = 5.4 K = 4.6 D = 3.2	2.5	4.9	6.5	18.8	0.9	
	927772-3	C		CuSn4	PRETINNED vorverzinnt min. 1µm										
	927772-1	C		CuFe2											

4806 (3/13)

SECTION C-C Schnitt / SECTION D-D Schnitt

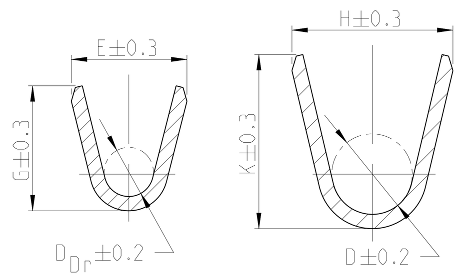

DESIGN 1
Ausfuehrung 1

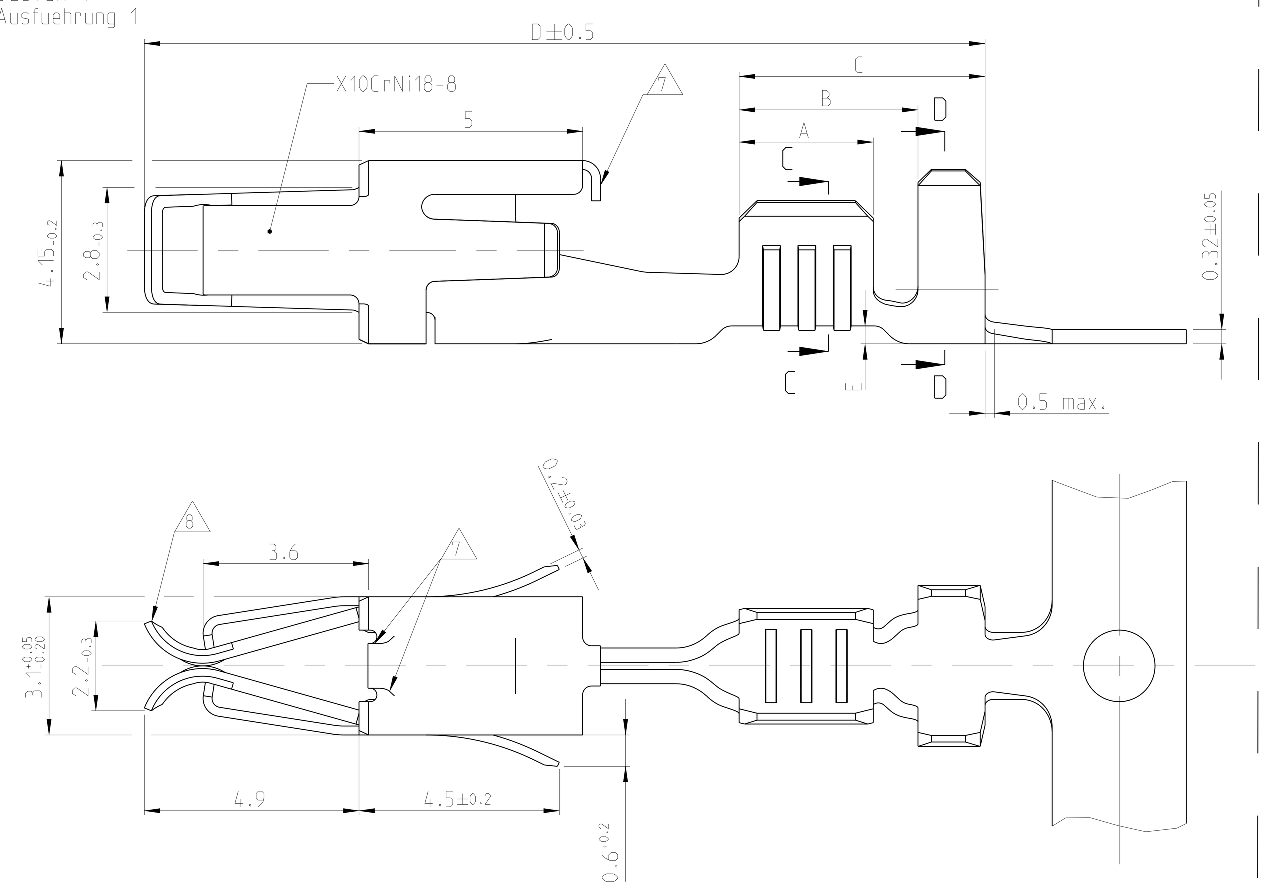

DESIGN 5
Ausfuehrung 5

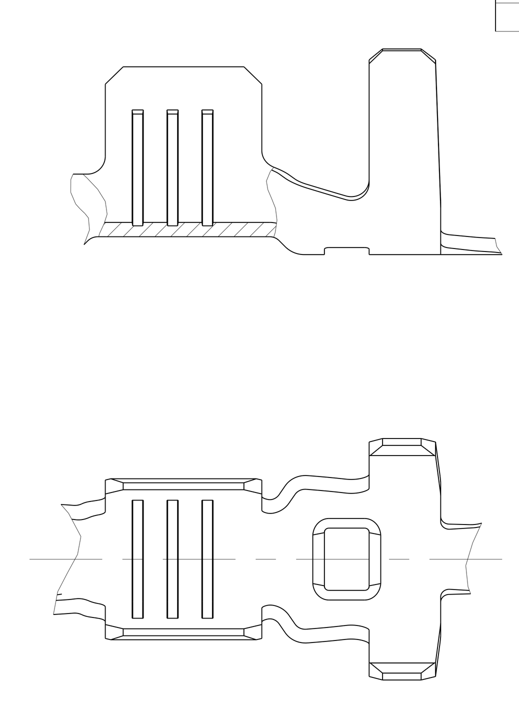

DESIGN 2
Ausfuehrung 2

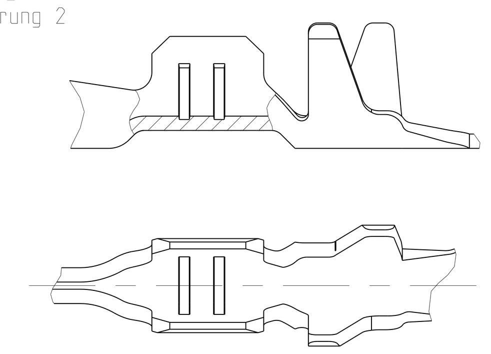

DESIGN 6
Ausfuehrung 6

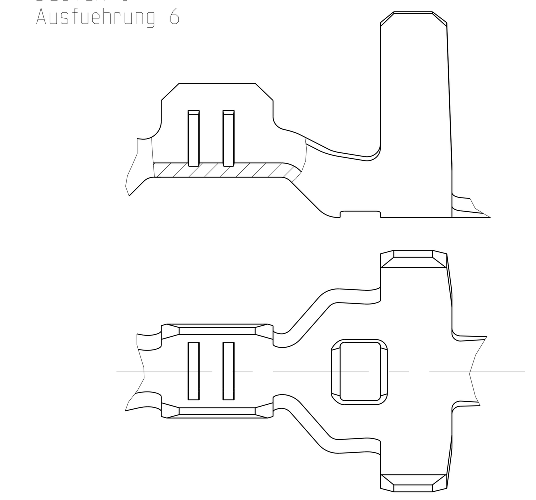

DESIGN 3
Ausfuehrung 3

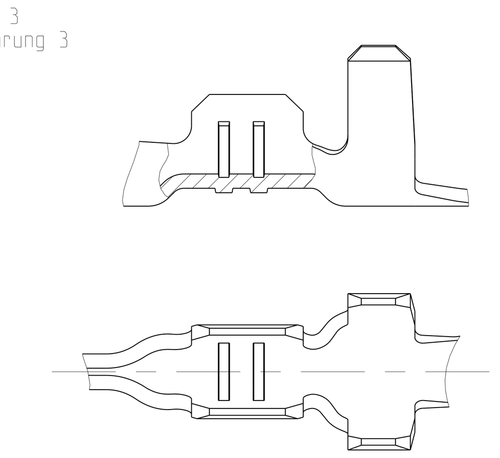

DESIGN 4
Ausfuehrung 4

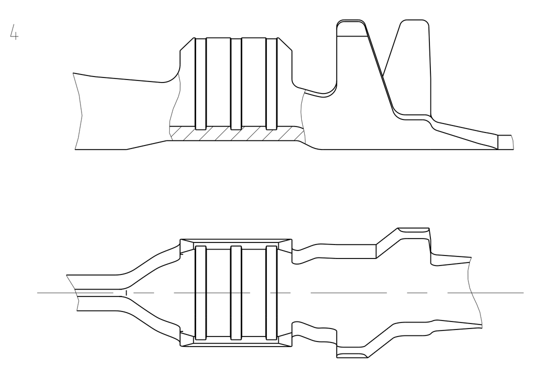

SINGLE WIRE SEAL Einzel-Dichtung △11		
828904-1	1.2-2.1	blue blau
828905-1	2.2-3.0	white weiss
ORDER No. Bestell-Nr.	INSULATION Ø Isolations Ø	COLOUR Farbe

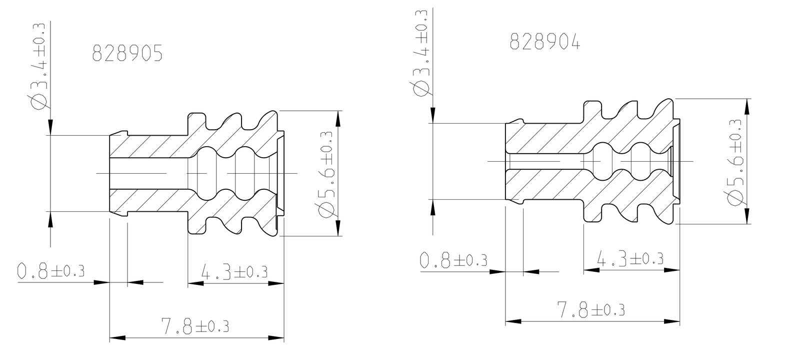

5:1

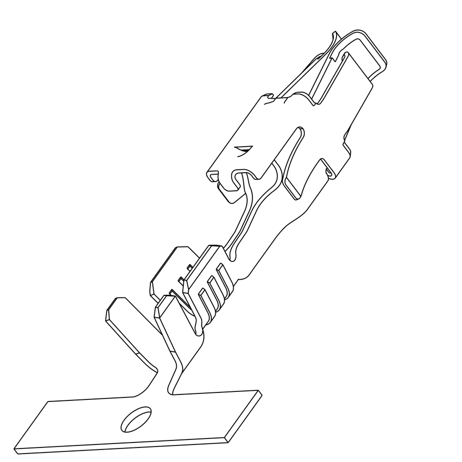

NOTES
Bemerkungen

△1 CONTACT BODY PRE-SILVER PLATED MIN. 0.8µm
Kontaktkoerper vorversilbert min. 0.8µm
CONTACT ZONE SELECTIVE PRE-SILVER PLATED MIN. 3µm
Kontaktzone selektiv vorversilbert min. 3µm

△2 CONTACT ZONE GOLD PLATED MIN. 0.8µm OVER MIN. 1.3µm NICKEL-LAYER
Kontaktzone vergoldet min. 0.8µm ueber min. 1.3µm Nickel-Zwischenschicht
CRIMP AREA MIN.1µm TIN PLATED OVER NICKEL-LAYER
Crimpbereich min. 1µm verzinnt ueber Nickel-Zwischenschicht

△3 CANTILEVER SPRING INSIDE AND OUTSIDE 0.4-1.2µm GOLD PLATED
Ueberfeder innen und aussen 0.4-1.2µm vergoldet

△4 CONTACT BODY, CONTACT SPRING INSIDE AND CRIMP AREA MIN. 1µm TIN PLATED OVER NICKEL-LAYER, TOUCHING AREA TO CANTILEVER SPRING AND CONTACT SPRING OUTSIDE SELECTIVE 0.8µm GOLD OVER MIN. 1.3µm NICKEL-LAYER
Kontaktkoerper, Kontaktfeder innen und Crimpbereich min. 1.3µm verzinnt ueber Nickel-Zwischenschicht, Anlageflaeche zur Ueberfeder und Kontaktfeder aussen selektiv 0.8µm vergoldet ueber min. 1µm Nickel-Zwischenschicht

△5 CONTACT ZONE AND TOUCHING AREA TO CANTILEVER SPRING MIN. 0.8µm SELECTIVE GOLD PLATED OVER 1.3µm NICKEL PLATED, CRIMP AREA MIN. 1µm TIN PLATED OVER NICKEL-LAYER
Kontaktzone und Anlageflaeche zur Ueberfeder min. 0.8µm vergoldet ueber min. 1.3µm Nickel-Zwischenschicht Crimpbereich min. 1µm verzinnt ueber Nickel-Zwischenschicht

△6 CONTACT BODY AND CRIMP AREA MIN. 1µm TIN PLATED OVER NICKEL-LAYER, TOUCHING AREA TO CANTILEVER SPRING SELECTIVE 0.8µm GOLD OVER MIN. 1.3µm NICKEL-LAYER
Kontaktkoerper und Crimpbereich min. 1µm verzinnt ueber Nickel-Zwischenschicht
Anlageflaeche zur Ueberfeder selektiv 0.8µm vergoldet ueber min. 1.3µm Nickel-Zwischenschicht

△7 CONTACT OFF OPTIONAL
Abschnitt\Freischnitt optional

△8 SAWAG ONLY FOR PN 929937,929939, 929941
Swage nur fuer PN 929937, 929939, 929941

△9 VARIANTS WITH GAP-SIZE 0.3mm (±0.1)
Varianten mit Gap-Size 0.3mm (±0.1)

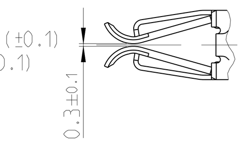

△10 CONTACTS DIPPED IN OR SPRAYED WITH LUBRICANT BARRIERTA
Kontakte getaucht oder besprueht mit Lubricant Barrierta

△11 ACCORDING INSULATION DIA IS TO CHOOSE THE SINGLE WIRE SEAL
Entsprechend dem Isolationsdurchmesser ist die Einzel-Dichtung auszuwaehlen

△12 VARIANTS WITH GAP-SIZE 0.65mm (-0.1)
Varianten mit Gap-Size 0.65mm (-0.1)

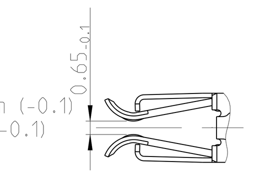

△13 VARIANTS WITH GAP-SIZE 0.15mm (-0.05)
Varianten mit Gap-Size 0.15mm (-0.05)

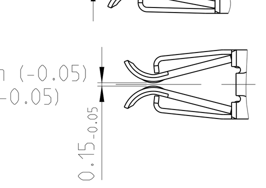

REVISIONS					
P	LTR	DESCRIPTION	DATE	DWN	APVD
	A14	New Creo drawing created	25APR2014	Ho.	Eder
	A15	Material of PN 928810-1 corrected	26MAY2014	Gilch	Eder
	A16	Add PN´s in the Table	25NOV2014	Ho.	Eder
	A17	PNs ADDED IN THE TABLE	23SEP2020	JPN	PM

THIS DRAWING IS A CONTROLLED DOCUMENT.
DIMENSIONS: mm
TOLERANCES UNLESS OTHERWISE SPECIFIED: 0 PLC ± / 1 PLC ± / 2 PLC ± / 3 PLC ± / 4 PLC ± / ±0.2 / ANGLES ±1°
MATERIAL: SEE TABLE -
FINISH: SEE TABLE -
DWN K. Gerlach 09JUN99
CHK J. Has 09JUN99
APVD -
PRODUCT SPEC 108-18013
APPLICATION SPEC 114-18050
WEIGHT -
TE Connectivity
NAME: PRODUCT GROUP DRAWING FOR JUNIOR POWER TIMER CONTACT
Produkt-Gruppen-Zeichnung fuer JPT
SIZE A0 | CAGE CODE 00779 | DRAWING NO C-1355046 | RESTRICTED TO -
Customer Drawing | SCALE 5:1 | SHEET 1 OF 1 | REV A17

Mouser Electronics

Authorized Distributor

Click to View Pricing, Inventory, Delivery & Lifecycle Information:

TE Connectivity:
929939-3